Specific directions for GTD- installation to Samsung/Multidata cash register (customer display commanding):

Type: ER-380/420M,ER-600/650,ER-52xx

The transaction data for Samsung/ Multidata cash registers are acquired by "listening in" on the data connection between the point-of-sale and the customer display.

Interface parameters (default):
9600 Baud, none Parity, 1 Stopbit, 8 Data bits.

The single version (***Samsung_1x.gtd***) always only shows the last transaction of the point-of-sale.

With the scroll version (***Samsung_sc.gtd***), the information of several transactions is shown in a changeable scrolling field.
In the POS Menu (when using a PS/2 keyboard: press *F1*), the starting line or number of scrolling lines can be changed if desired:
Please take care that the end of the scroll field (starting line + scroll lines -1; default: start: 9; number 8 -> scroll field of 9-16!) does NOT go beyond line 16!

NOTE:
After receiving a data stream, the system waits for a timeout and then takes the last 40 characters. The timeout is entered in increments of 10 ms under "*Register No.*" in the POS Menu (default: 05 = 50 ms). If during a fast transaction procedure one article or another is "lost", then please set the timeout to 20 or 30 ms (i.e. using 02 or 03 as number).
If no customer display is connected, it is possible to change the baud rate to 19,200 baud in the cash register configuration. The interface configuration of the **GTD** then also needs to be adapted. With a data rate of 19,200 baud, the transaction data are transferred in a shorter interval, the transmission pause is greater and thus easier to detect.

Configuration Samsung/Multidata-Kasse (see 'ServiceMode'- programming on manual!):
Baudrate: 9600 – Parity: NONE – Databits: 8BITS – Stopbits: 1BIT – DeviceFunction: POLE
Pole Display: 0(EPSON)
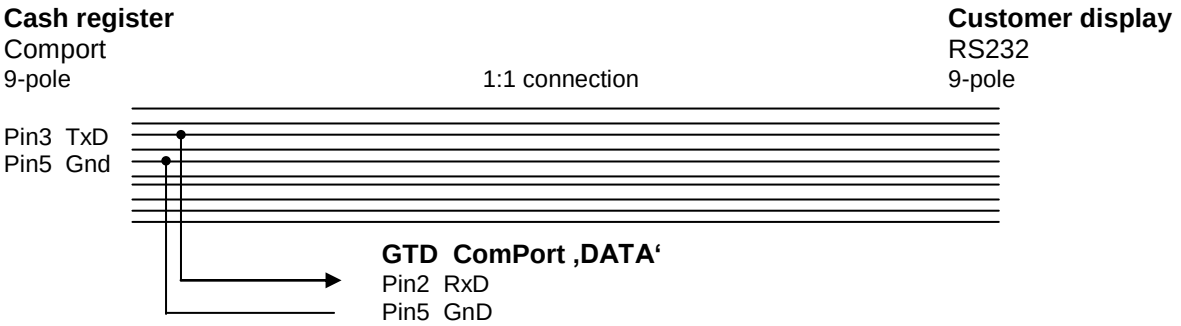
Manufacturing of a ,listening in" – cable connection: